Honeywell

CT40/CT40 XP Series

powered by Android™

Quick Start Guide

CT40-A-EN-QS-01 Rev H
09/22

Out of the Box

Make sure that your shipping box contains these items:

- Mobile Computer
  Model CT40-L0N, CT40-L1N, CT40P-L0N, or CT40P-L1N
- Rechargeable Li-ion battery (see page 7)
- Hand strap
- Product documentation

If you ordered accessories for your mobile computer, verify that they are also included with the order. Be sure to keep the original packaging in case you need to return the mobile computer for service.

Note: *CT40-L0N/CT40P-L0N models do not include a WWAN radio.*

Memory Card Specifications

Honeywell recommends the use of Single Level Cell (SLC) industrial grade microSD™ or microSDHC™ memory cards with mobile computers for maximum performance and durability. Contact a Honeywell sales representative for additional information on qualified memory card options.

Mobile Computer Features

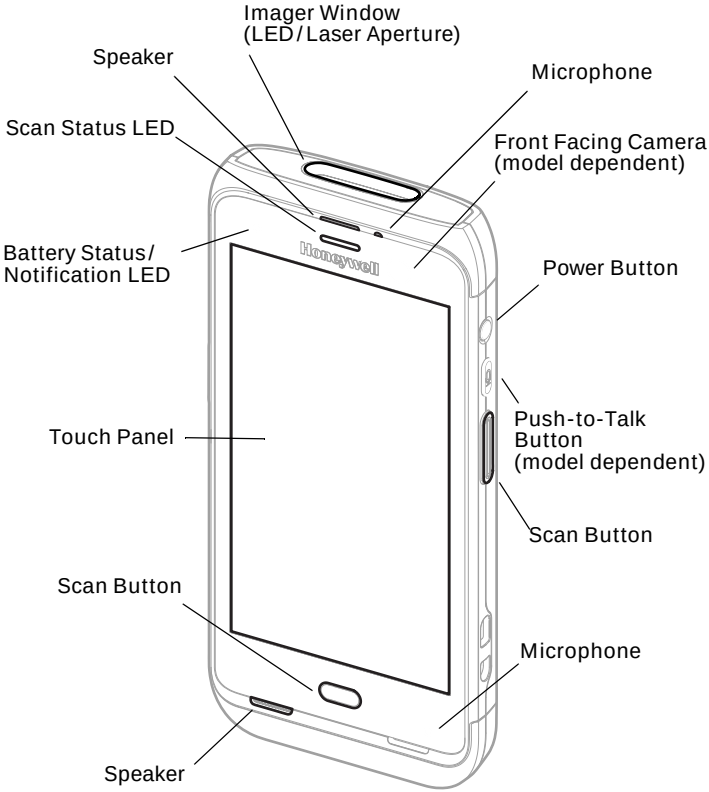

Note: *Hand strap not shown.*

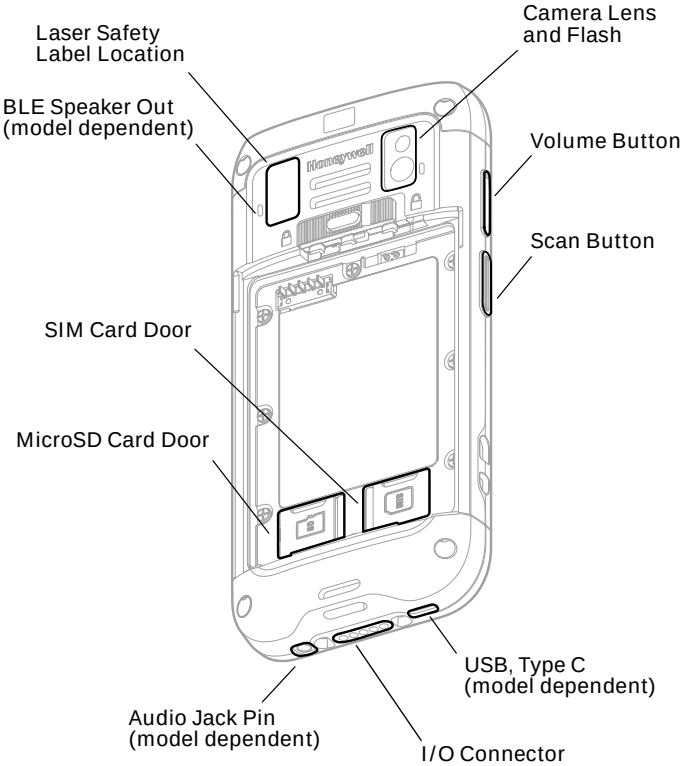

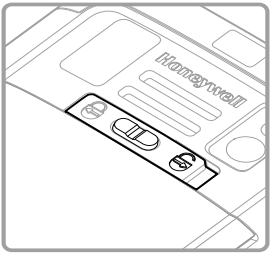

Battery Latch (Model CT40-xxx-xxxxx0x)

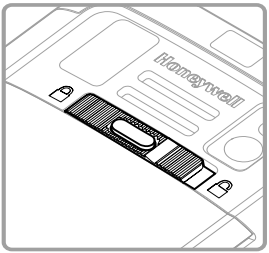

Battery Latch (Models CT40-L0N-xxxxxAx, CT40-xxx-xxxxxBx, CT40-xxx-xxxxxHx, and all CT40XP)

Battery
(Refer to page 7)

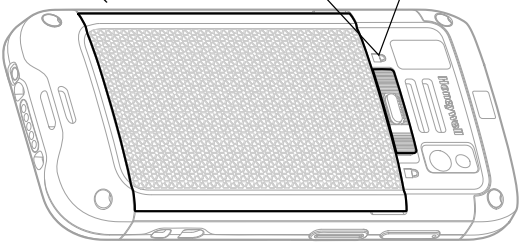

Install a microSD Card (Optional)

Note: *Format the microSD card before initial use.*

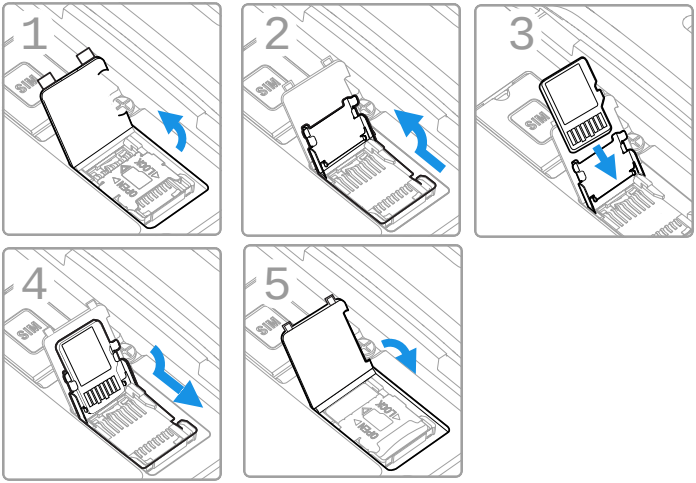

Note: *Always power off the computer before attempting to install or remove a card.*

Install a microSIM Card

Note: *Phone feature is only available on CT40-L1N/CT40P-L1N models. On all models, the SIM slot supports use of a UICC card for NFC Secure Element NFC link encryption.*

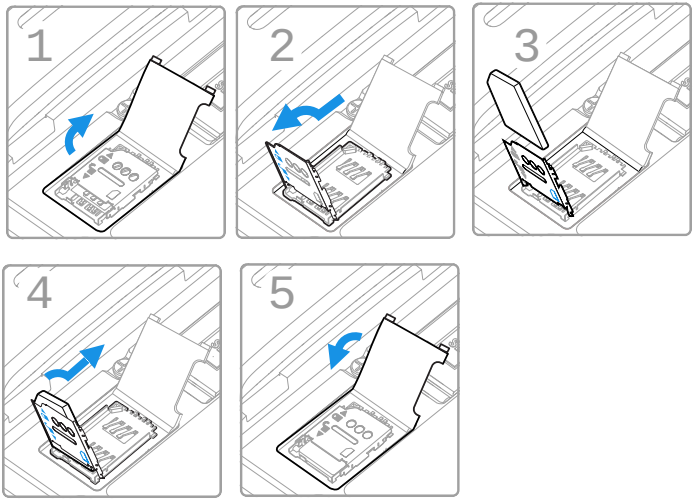

Note: *Always power off the computer before attempting to install or remove a card.*

About the Battery

The mobile computer ships with a Li-ion battery manufactured for Honeywell International Inc.

Before you attempt to use, charge or replace the battery in the device, carefully read all labels, markings and product documentation provided in the box or online at sps.honeywell.com. To learn more about Battery Maintenance for Portable Devices, go to honeywell.com/PSS-BatteryMaintenance.

Avant d'essayer d'utiliser, de charger ou de remplacer la batterie de l'appareil, lisez attentivement toutes les étiquettes, marquages et documentation du produit fournis dans la boîte ou en ligne à sps.honeywell.com. Pour en savoir plus sur l'Entretien de Batteries pour Appareils Portables, consultez-le honeywell.com/PSS-BatteryMaintenance.

We recommend use of Honeywell Li-ion battery packs. Use of any non-Honeywell battery may result in damage not covered by the warranty.

Nous recommandons l'utilisation de batteries Li-ion de la marque Honeywell. L'utilisation d'une batterie d'un autre fabricant est susceptible de provoquer des dommages non couverts par la garantie.

Ensure all components are dry prior to placing the battery in the computer. Mating wet components may cause damage not covered by the warranty.

Assurez-vous que tous les composants sont secs avant d'insérer la batterie dans l'ordinateur. L'insertion de composants humides risque de provoquer des dommages non couverts par la garantie.

CT40 Models

Model Configuration x = configuration variations	**Battery P/N**	**Power**
CT40-xxx-xxxxx0x	318-005-011	3.85 VDC, 15.5 watt-hour
CT40-xxx-xxxxxHx	318-055-017 318-055-H67	3.85 VDC, 15.5 watt-hour
CT40-LON-xxxxxAx	318-055-015 318-055-067	3.85 VDC, 15.5 watt-hour
CT40-xxx-xxxxxBx	318-055-015 318-055-067	3.85 VDC, 15.5 watt-hour
CT40-xxx-xxxxxDx	318-055-D67	3.85 VDC, 15.5 watt-hour
Configuration number (CN) is located on the label in the battery well of the mobile computer.		

CT40XP Models

Model Configuration	**Battery P/N**	**Power**
CT40P-xxx-xxxxxHx	318-055-H67	3.85 VDC, 15.5 watt-hour
CT40P-xxx-xxxxxAx	318-055-067	3.85 VDC, 15.5 watt-hour
CT40P-xxx-xxxxxBx	318-055-067	3.85 VDC, 15.5 watt-hour
CT40P-xxx-xxxxxDx	318-055-D67	3.85 VDC, 15.5 watt-hour
Configuration number (CN) is located on the label in the battery well of the mobile computer.		

Install Battery (Model CT40-xxx-xxxxx0x)

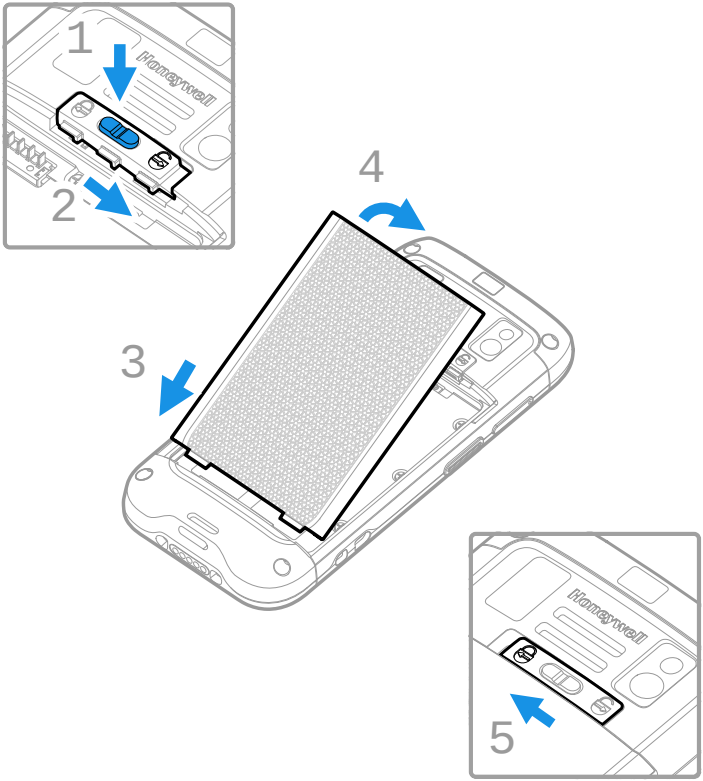

Install Battery (Models CT40-LON-xxxxxAx, CT40-xxx-xxxxxBx, CT40-xxx-xxxxxHx, and all CT40XP)

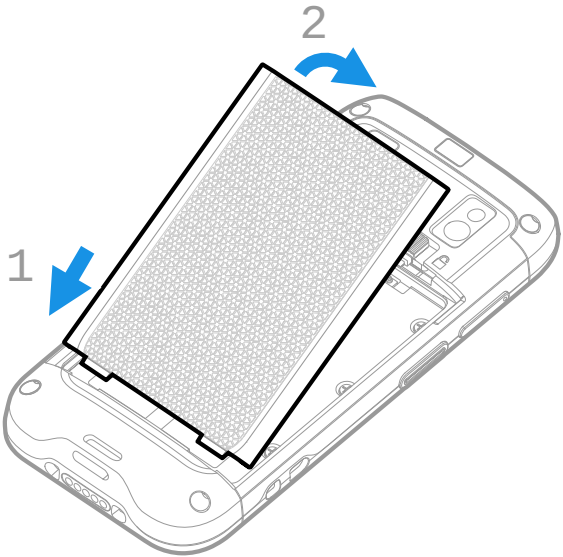

Install the Hand Strap

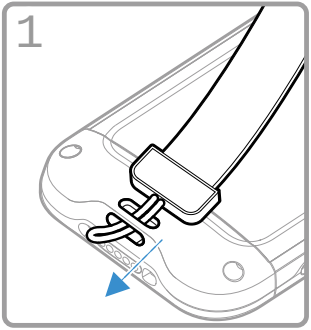

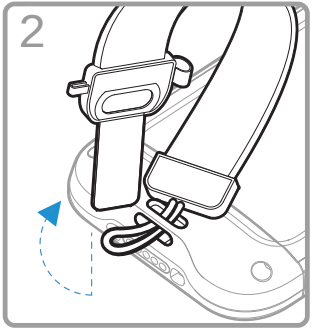

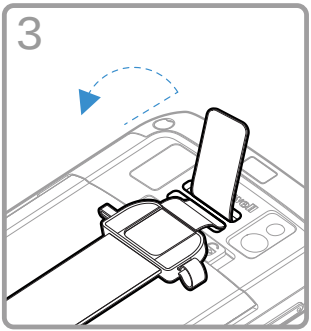

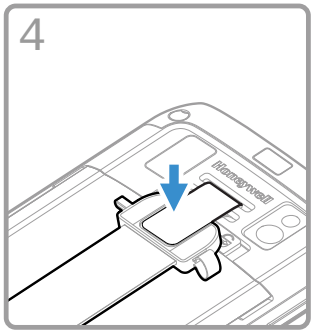

Charge the Mobile Computer

The mobile computer ships with a partially charged battery. Charge the battery with a CT40 series charging device for a minimum of **4 hours**. Using the computer while charging the battery increases the time required to reach a full charge.

We recommend the use of Honeywell accessories and power adapters. Use of any non-Honeywell accessories or power adapters may cause damage not covered by the warranty.

Nous recommandons d'utiliser des accessoires et des adaptateurs secteur de marque Honeywell. L'utilisation de tout accessoire ou adaptateur secteur d'une autre marque est susceptible de provoquer des dommages non couverts par la garantie.

CT40 series mobile computers are designed for use with the following CT40 charging accessories: HomeBase, Ethernet HomeBase, ChargeBase, NetBase, Quad Battery Charger, Vehicle Power Adapter, Vehicle Dock, and USB Adapter.

Ensure all components are dry prior to mating the computers and batteries with peripheral devices. Mating wet components may cause damage not covered by the warranty.

Assurez-vous que tous les composants sont secs avant de raccorder les ordinateurs et les batteries à des périphériques. L'insertion de composants humides risque de provoquer des dommages non couverts par la garantie.

Turn Power On/Off

The first time you power on the computer, a Welcome screen appears. You can either scan a configuration barcode or use the Wizard to manually set up the computer. Once setup is complete, the Welcome screen no longer appears on startup and Provisioning Mode is automatically turned off (disabled).

To turn the computer on:

- Press and hold the **Power** button for approximately 3 seconds, and then release.

To turn the computer off:

1. Press and hold the **Power** button until the options menu appears.
2. Touch **Power Off**.

Battery Replacement

Before removing the battery, always do one of the following:

- Power off the computer.
- Place the unit in Swap Battery mode (feature availability is model dependent).

Swap Battery Mode

Swap Battery mode places the computer in a low power state so that the battery can be removed for a short time. This feature is not available on all models.

To activate Swap Battery mode:

1. Press and hold the **Power** button until the options menu appears.
2. Touch **Swap Battery** and follow the on-screen instructions.
3. Once you replace the battery, press the **Power** button.

Screen Timeout

Screen timeout automatically turns the touch panel display off and locks the computer to save battery power when the computer is inactive for a programmed period of time.

1. Press and release the **Power** button to wake the computer.
2. Drag the toward the top of the display to unlock the computer.

Adjust the Screen Timeout

To adjust the amount of time before the display sleeps after inactivity:

1. Swipe up on the touch screen.
2. Select **Settings** > **Display** > **Screen Timeout**.
3. Select the amount of time before the display goes to sleep.
4. Touch to return to the Home screen.

About the Home Screen

Notification / Status Bar

Search Bar

Home Screen Panel

Favorites Tray

Navigation Buttons

To learn how to customize the Home screen, see the user guide.